ROITHNER LASERTECHNIK GmbH
WIEDNER HAUPTSTRASSE 76 1040 VIENNA AUSTRIA
TEL. +43 1 586 52 43 -0, FAX. -44 OFFICE@ROITHNER-LASER.COM

DIL5130

- **INFRARED Light Emitting Diode**
- **1300 nm, 3.5 mW**
- **AlGaAs**
- **5 mm epoxy package**

RoHS COMPLIANT Pb Pb-Free

Description

DIL5130 is an infrared LED, typically emitting at 1300 nm with an optical output power of 3.5 mW. It comes in a hermetically sealed clear 5 mm epoxy resin.

Maximum Rating (T_{CASE} = 25°C)

Parameter	Symbol	Values Min.	Values Max.	Unit
Power Dissipation, DC	P_D		50	mW
Forward Current	I_{FM}		40	mA
Operating Temperature	T_{OPR}	- 20	+ 80	°C
Storage Temperature	T_{STG}	- 40	+ 85	°C
Soldering Temperature (max 3s)	T_{SOL}		+ 260	°C

Electro-Optical Characteristics (T_{CASE} = 25°C, I_F = 20 mA)

Parameter	Symbol	Values Min.	Values Typ.	Values Max.	Unit
Peak Wavelength	λ_P		**1300**		**nm**
Spectral Width (FWHM)	$\Delta\lambda$		80		nm
Forward Voltage @ 20 mA	V_F		1.0	1.2	V
Reverse Voltage (I_R = 10 µA)	V_R			5	V
Radiant Power @ 20 mA	Θ_e		3.5		mW
Viewing Half Angle	$\Theta_{1/2}$		15		deg.

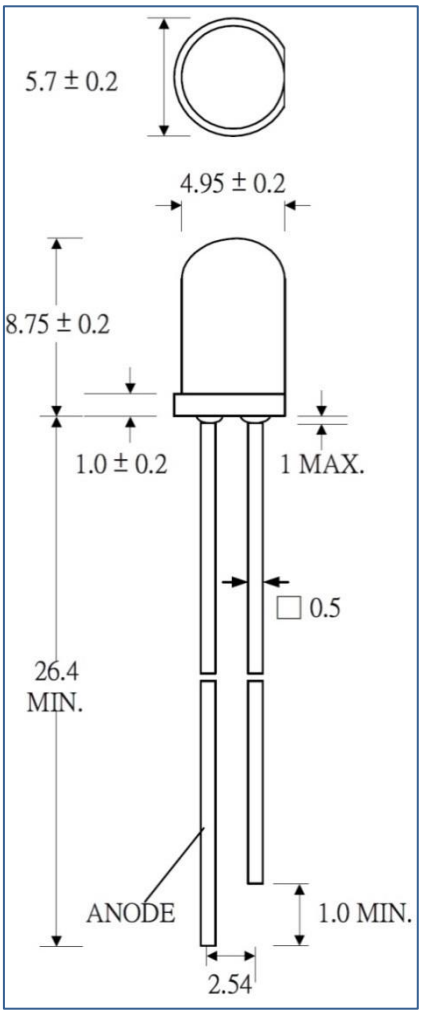

All dimensions in mm

© All Rights Reserved
The above specifications are for reference purpose only and subjected to change without prior notice